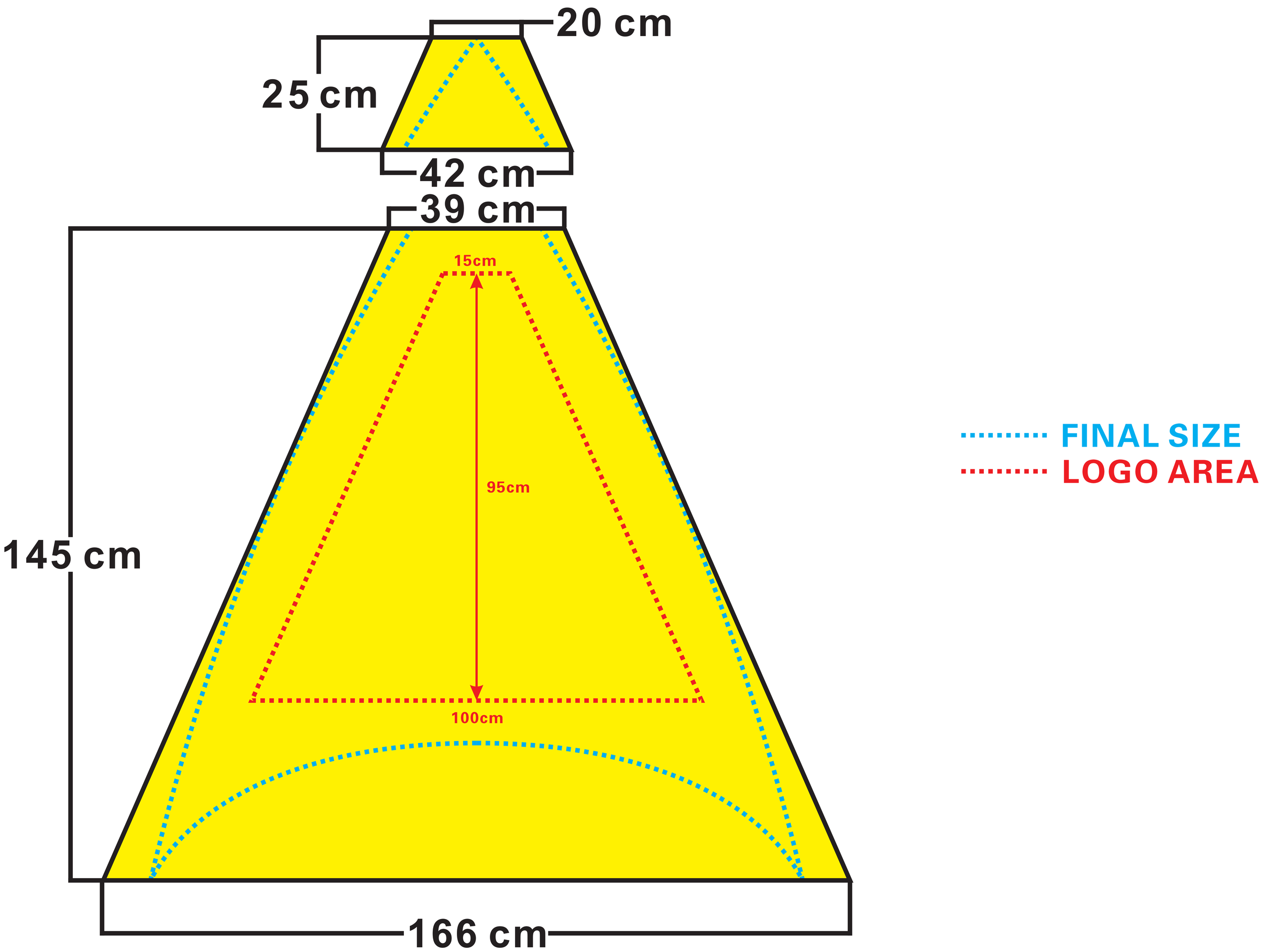
20 cm
25 cm
42 cm
39 cm
15cm
95cm
100cm
145 cm
166 cm
FINAL SIZE
LOGO AREA

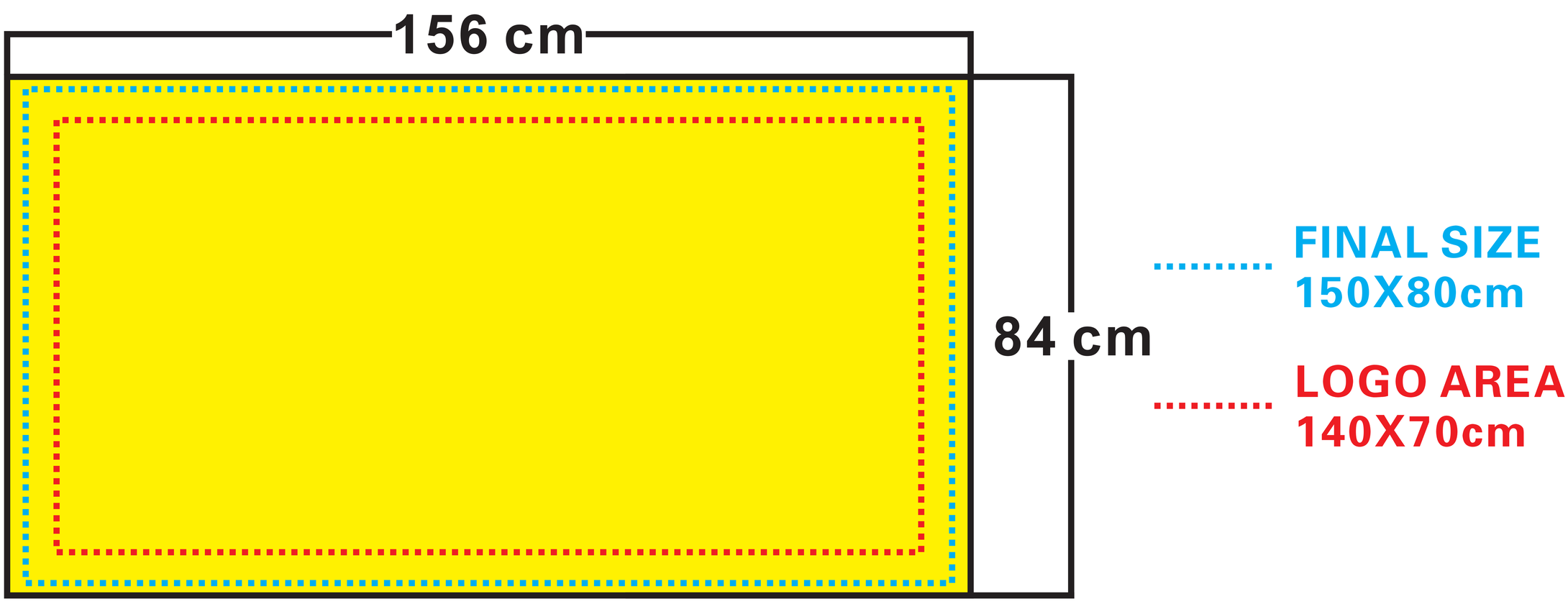
156 cm
84 cm
FINAL SIZE
150X80cm
LOGO AREA
140X70cm